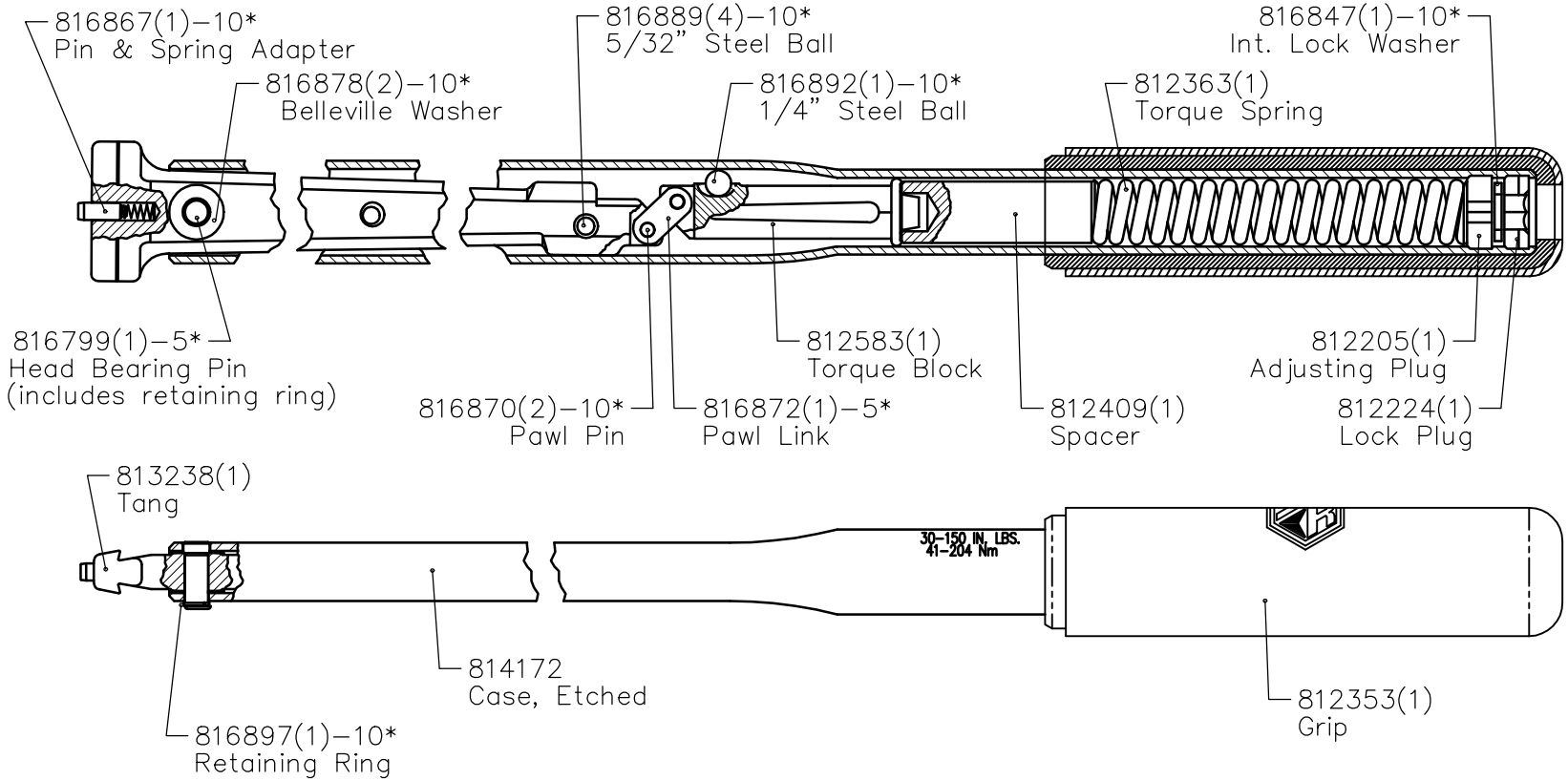

816799–THIS PIN IS FORMED OVER
CUSTOMER MUST GRIND OFF FORMED END
& INSTALL THIS PIN FORMING THE HEAD
OVER THE RETAINING RING AS SHOWN.

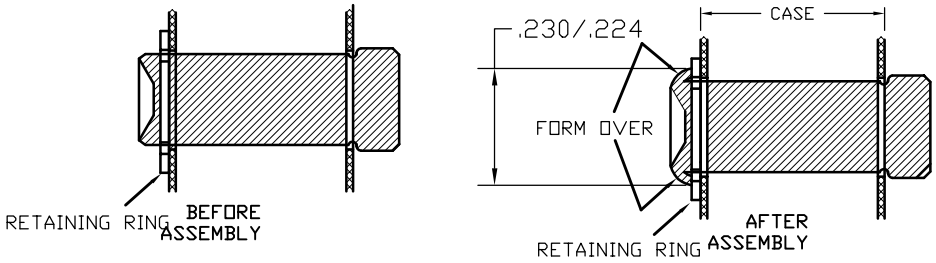

857045–Instruction Sheet
811074–Tang Ass'y. (Includes Tang & Pin & spring adapter)

LEGEND: ( ) = Quantity/Tool
* = Quantity/Multi–Pak

STURTEVANT RICHMONT®
TORQUE MEASUREMENT SYSTEMS
DIVISION OF RYESON CORPORATION

THIS PRINT AND ALL INFORMATION APPEARING THEREON IS THE PROPERTY OF "STURTEVANT/RICHMONT". NEITHER THE PRINT NOR THE INFORMATION THEREON MAY BE REPRODUCED OR USED IN ANY MANNER WHATSOEVER OR DIVULGED TO ANY OTHER PERSON UNLESS SPECIFICALLY AUTHORIZED BY "STURTEVANT/RICHMONT".

PART DESCRIPTION
LTC–ERGO 1800I (IN./LBS)

DIAGRAM NO. & REV.
810054–A