PART NO. 810802

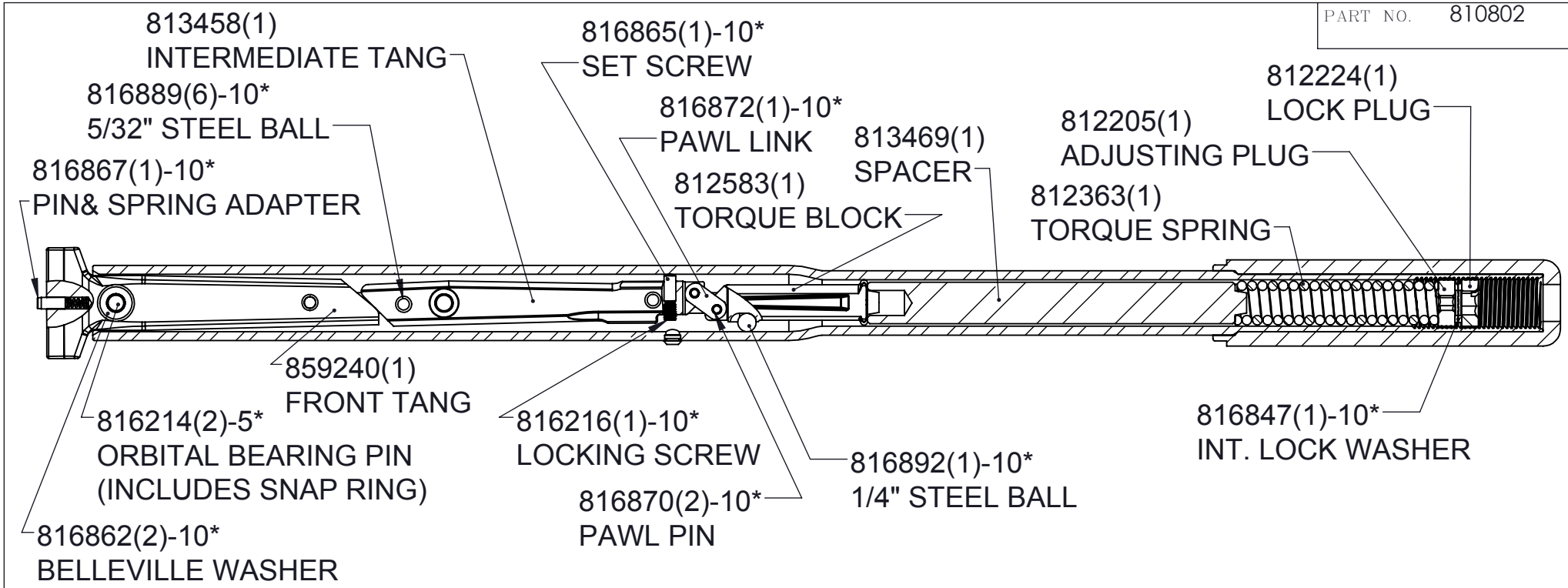

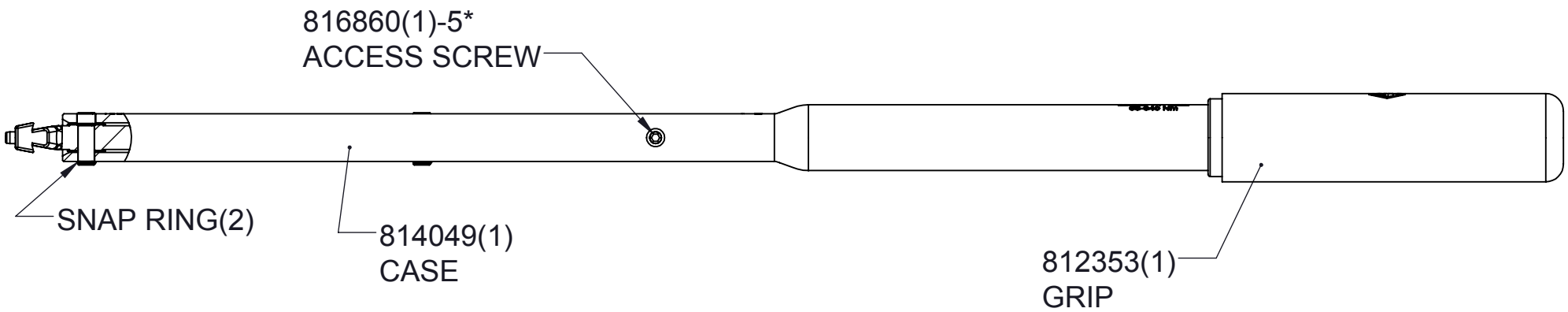

LEGEND: ( ) = QUANTITY/TOOL
* = QUANTITY/MULTI-PAK

STURTEVANT RICHMONT® TORQUE MEASUREMENT SYSTEMS DIVISION OF RYESON CORPORATION	THIS PRINT AND ALL INFORMATION APPEARING THEREON IS THE PROPERTY OF "STURTEVANT RICHMONT". NEITHER THE PRINT NOR THE INFORMATION THEREON MAY BE REPRODUCED OR USED IN ANY MANNER WHATSOEVER OR DIVULGED TO ANY OTHER PERSON UNLESS SPECIFICALLY AUTHORIZED BY "STURTEVANT RICHMONT".	DESCRIPTION LTC 3000I	DIAGRAM No 810802	REV. -