Interchangeable Heads (DIN) – Square Drive

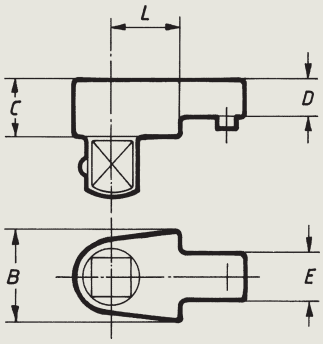

Interchangeable square drive head with DIN rectangle connector 9×12 mm rsp. 14×18 mm. The head is secured by a spring-loaded lock pin.

Square drive according to DIN 3120A. The load capacity is dependent on the width A/F and may be less than the capacity of the used clicker wrench.

Interchangeable heads with the same centre line may be interchanged among themselves arbitrarily, without needing the torque wrench to be adjusted again. Vice versa, when interchanging heads with differing centre lines, the torque wrench must be individually adjusted in each case!

- Square drive acc. DIN 3120A.
- DIN rectangle insert 9×12 mm rsp. 14×18 mm.
- Secured by spring-loaded lock pin.
- Centre line 17.5 mm rsp. 25 mm.
- Forged alloy steel, chrome plated.

Recommended for use with S/R preset torque wrenches series TC.

S9-SD

Model	Item No.	Sq.Dr. Inch	max. N·m	Dimensions mm B	C	L	Price €	PG
S9-SD 1/4	R716257	1/4	25	22	14	17.5		15
S9-SD 3/8	R716258	3/8	90	22	14	17.5		15
S9-SD 1/2	R716259	1/2	100	22	14	17.5		15

S14-SD

Model	Item No.	Sq.Dr. Inch	max. N·m	Dimensions mm B	C	L	Price €	PG
S14-SD 1/2	R716759	1/2	250	30	18	25		15
S14-SD 3/4	R716760	3/4	300	40	25	25		15

Prices are valid per unit in Euro plus VAT and/or any custom fees exw Hamburg, incl. package. Errors or alteration excepted.

ZEMO Vertriebs GmbH · Peutestr. 47 · 20539 Hamburg · Tel: +49 (0)40-789181-02 · Fax: +49 (0)40-789181-12 · E-Mail: info@zemo-tools.de